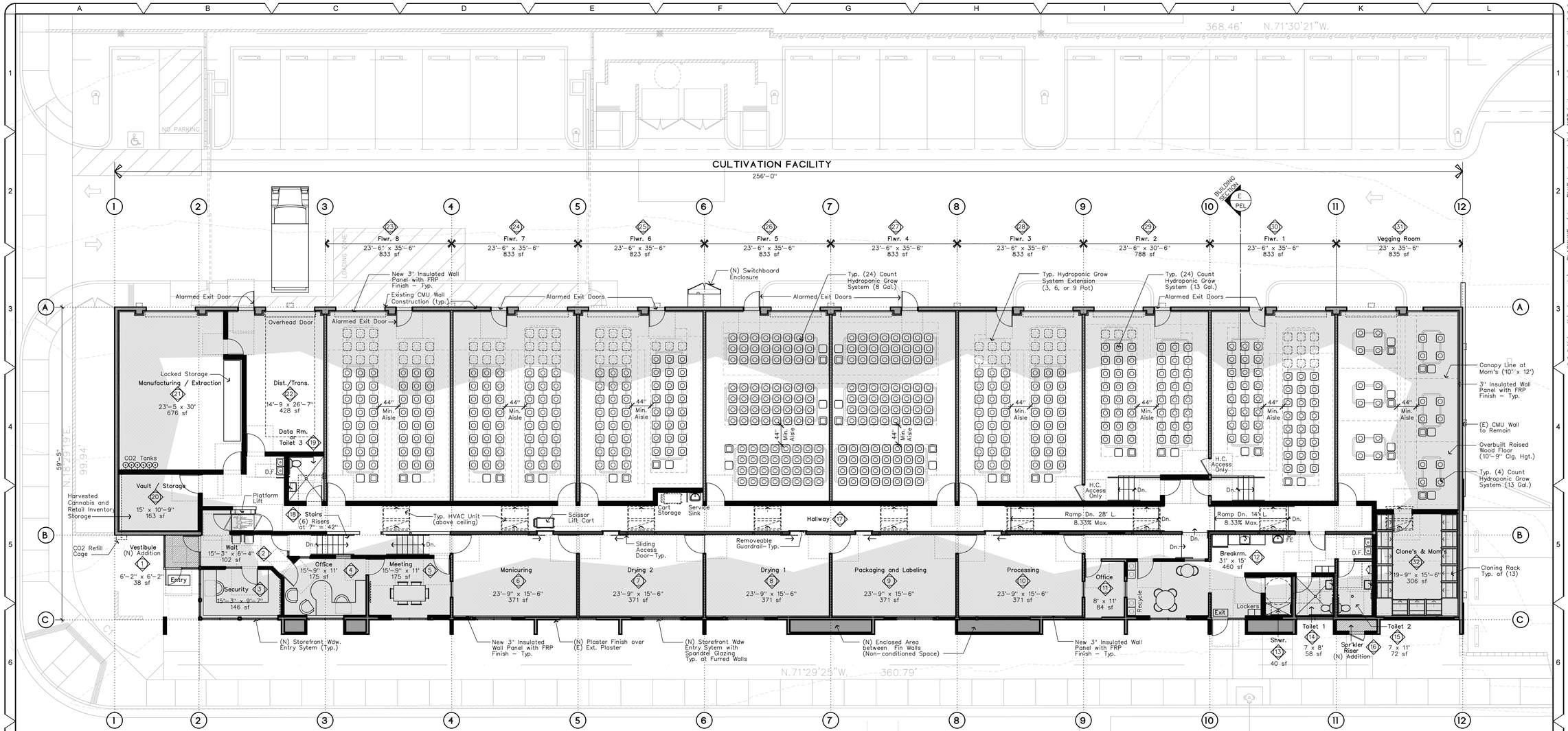

PROPOSED FLOOR PLAN / PREMISES PLAN

SCALE: 1/8" = 1'-0"

AREA LEGEND

- Existing Structure to Remain
- New Addition

AREA TABULATIONS

CULTIVATION FACILITY

Office Area	720 sq. ft.
Breakroom	460 sq. ft.
Manicuring/Drying/Packaging	1855 sq. ft.
Manufacturing / Extraction	676 sq. ft.
Vault / Storage	163 sq. ft.
Dist./Trans (Loading Area)	428 sq. ft.
Grow Areas	7444 sq. ft.
Clones and Mom's	306 sq. ft.
Support/Circulation/Lift/R.R's	1850 sq. ft.
Net Total	13,902 sq. ft.
Misc. (Wall Areas)	1,086 sq. ft.
Gross Total	14,988 sq. ft.

VEHICLE GATE

1. Gate: Custom steel framework with 1" sq. ornamental pickets to match fence. Wheeled rollers on V-track stl. angle anchored to conc. pad.
2. Operator: "Elite" SL3000UL, 1/2" H.P. comm. slide operator; Class II with primary entrapment sensing and secondary non-contact sensors (photoelectronic); installed per UL 325 'Entrapment Protection Requirements'. Provide loop detectors and 2-button transmitters.

PEDESTRIAN GATE

1. Gate: Custom steel framework with 1" sq. ornamental pickets to match fence.

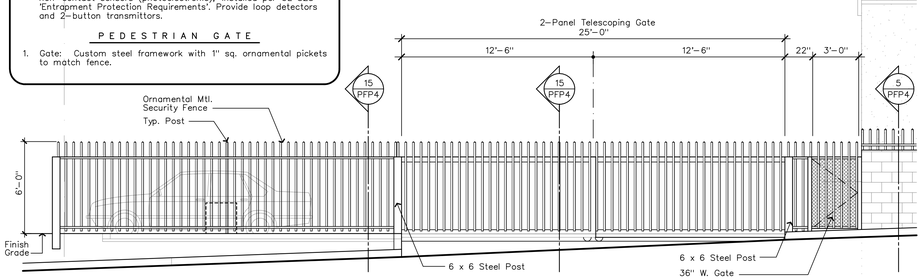

TYPICAL ORNAMENTAL SECURITY FENCE — 1/2" = 1'-0" — 25

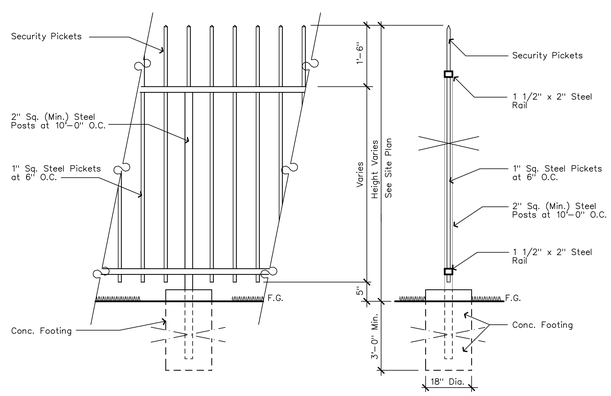

TYPICAL ORNAMENTAL SECURITY WALL — 3/4" = 1'-0" — 15

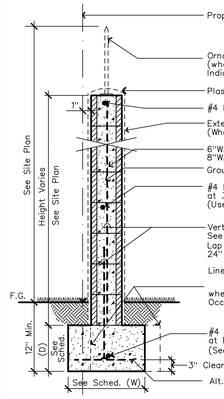

Note: See Structural Drawings for Details that may supercede these drawings

WALL HT. ABV. – H.	FOOTING W.	FOOTING D.	VERTICAL BARS	HORIZONTAL BARS
0' – 3'	17"	10"	#4 at 48" O.C.	#4 at 32" O.C.
3'–1" to 4'	20"	10"	#4 at 48" O.C.	#4 at 32" O.C.
4'–1" to 5'	23"	10"	#4 at 48" O.C.	#4 at 32" O.C.
5'–1" to 6'	29"	10"	#4 at 24" O.C.	#4 at 32" O.C.
6'–1" to 8'	33"	12"	#4 at 24" O.C.	#4 at 32" O.C.

NOTE:
1. Max. Grade Differential of 6" Allowed on Opposing Sides of Wall.
2. Grout Only the Cells containing Rebar.
3. All Rebar to be ASTM Spec A615, Grade 40 Min.
4. All Masonry Units to be ASTM C-90, Grade N.

TYPICAL FREE-STANDING BLOCK WALL — 3/4" = 1'-0" — 5

A Cultivation Facility for:
Southern Med Inc.
36733 Commercial Road Drive,
Cathedral City, California 92234
Parcel: 9999; Block: 999; A.P.N. # 687-081-006

This drawing may not be reproduced in whole or part without the expressed written consent of the Architect. Identifying marks and symbols have been incorporated to maintain conformance with this requirement.

* * * Unless this document is a BLACKLINE print on BLUE background it is NOT to be used for construction * * *

REVISIONS	BY

COPYRIGHT 2018

M ARCHITECTS
F Architecture - Planning - Interiors
A 75-145 St. Charles Place, Suite 4
D Palm Desert, CA 92211
D P: 760-346-8014 F: 760-568-0963
E Web: chrismcfaddenarchitect.com
N

southern med Inc.

PROPOSED FLOOR PLAN / PREMISES PLAN

DRAWN	–
CHECKED	
DATE	10-16-18
SCALE	1/8"=1'-0"
JOB NO.	1801.00
SHEET NO.	PFP4

Plotted: Friday, December 07, 2018